Steel Innovations Conference 2013
Christchurch, New Zealand
21-22 February 2013

SLAB COLUMN INTERACTION - SIGNIFICANT OR NOT?

M. Hobbs[1], G. MacRae[2], D. Bull[3], U. Gunasekaran[4] and R. Leon[5] and C. Clifton[6]

ABSTRACT

Composite construction is widely used worldwide and is undergoing significant technological development, with long span beams and improved deck profiles. New Zealand is part of this development, with supporting beam options incorporating multiple unstiffened web openings and new deck profiles supported by extensive testing. However, one area where little research has been undertaken is in the interaction of the composite slab with the seismic resisting system under severe lateral loading.

In order to provide important new information in this area, a series of full scale beam-column-joint-slab subassemblies is currently underway at the University of Canterbury. Specimens tested have moment end plate connections and different combinations of deck tray direction, and isolation of the slab from the column. An additional test uses a sliding-hinge type connection to assess the effect of the floor slab in this type of low damage connection.

These tests have shown that the lateral strength of the seismic resisting system is increased by up to 45% due to the presence of the slab in contact with the column. The increase in strength is greater for decking running in longitudinal direction than in the transverse direction as a result of a more substantial full depth slab bearing on the column. The sliding hinge joint showed little signs of damage. All units sustained drifts of up to 5% without significant strength loss.

Results from both testing and the modelling are being used to review current design guidelines for and provide design considerations for these composite structures.

Introduction

Composite construction is now common place in medium to high rise construction.. In many cases the use of cast in-situ concrete floor slabs within steel framed buildings provides engineers with an opportunity to reduce overall costs by creating a composite beam design for carrying gravity loads. In steel, this is often achieved through the use of profiled steel decking connected to the frame with steel shear studs. While standard design procedures are available for the design of composite beams under gravity loading, little design aid is available for the determination of the effect of slab-column interactions on the column and beam-column joints and the lateral strength of the structural system under seismic loading.

Concrete slabs can be either separated from the column face, in which case they are not considered in the design calculations, or poured such that they contact the column face. In current design guidelines around the world and including New Zealand, the presence of the slab is not permitted to be considered in the determination of the beam design strength to resist the design lateral forces. However, when designing the columns, the effect of the slab must be considered as part of the beam overstrength. This is due to the changing ratio of slab stiffness to beam stiffness when the beam becomes inelastic and can be over-conservative. Effects of the slab on low-damage moment connections are also not well quantified.

[1]Masters Candidate, Dept. of Civil and Natural Resources Engineering, University of Canterbury, Christchurch
[2]Associate Professor, Dept. of Civil and Natural Resources Engineering, University of Canterbury, Christchurch
[3]Professor, Dept. of Civil and Natural Resources Engineering, University of Canterbury, Christchurch
[4]Associate Professor, Anna university, Chennai, India
[5]Professor, Dept. of Civil and Environmental Engineering, Virginia Tech, Blacksburg
[6]Associate Professor, Dept. of Civil and Environmental Engineering, University of Auckland, Auckland

There is a need to further understand the effects of the slab so that it can be considered in design in a more rational manner.

This paper describes a study to address this need by seeking answers to the following questions:

- What is the effect of isolating the floor slab from the column on the strength and ductility of the system at both first yield and at the design inelastic displacement?

- What is the effect of the direction of the deck tray on the strength and ductility of the system?

- What are the primary modes of strength loss in these systems?

- What is the effect of the slab on the low-damage sliding hinge connection?

- Do the current methods used in NZS3404 result in a reasonable approximation of the effects of the composite slab and if not what changes could be made to improve the accuracy of the code calculations?

Treatment of Slab Effects

Before conducting these studies it was considered that a possible way to better incorporate slab effects in design could be to consider:

a) For isolated/separated slabs, that slab effects should not be considered in beam strength design to resist the lateral forces or in overstrength design
b) For slabs which are full depth for a significant distance (say equal to the beam depth) from the column face, that the slab effect could be considered both in beam strength design to resist the lateral forces and in overstrength design. This is similar to recommendations by AISC (2009) however it is dependent on the slab contribution at each of these two states which can be very different
c) For slabs which are placed in contact with the column face, but without special care, that the current NZ design approach continue to be used where the slab effect is not considered for beam strength design to resist the lateral forces but it is considered in overstrength design.

It is planned that the study conducted will enable such possible design considerations to be verified or other reasonable recommendations to be made.

Testing Program

The physical testing comprised of 5 specimens each of identical beam, column and floor sizes. The specimens comprised of two 3m 310UB32 half beams (to represent a 6m full span) connected to a 2m tall 310UC158 column at mid height as shown in Figure 1. The ends of the half beams were pinned to represent the point of inflection of the full length beam whilst the column was pinned at its base and a ram mount located 2m from the base pin centreline.

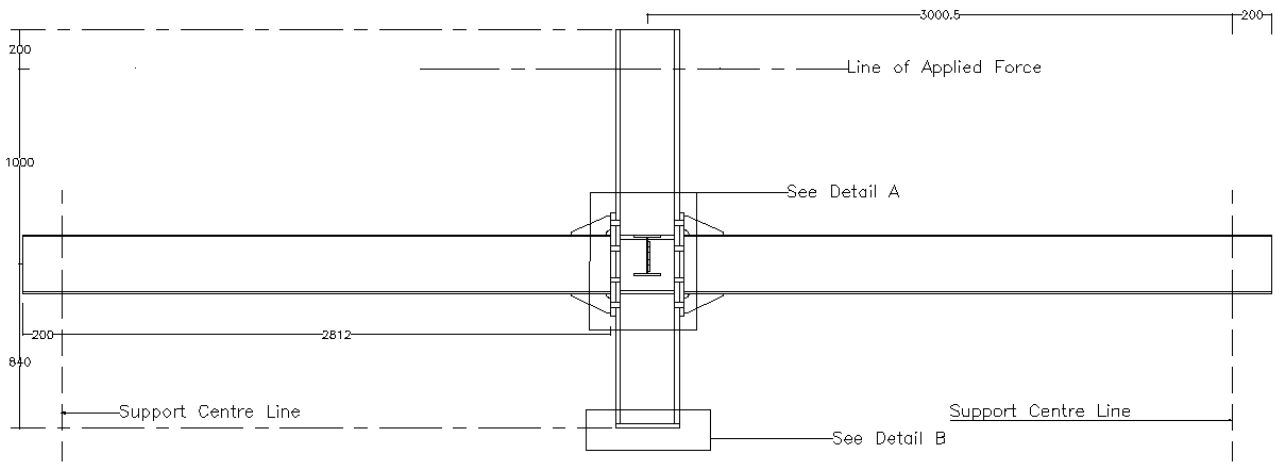

Figure 1: Beam and column setup for all tests.

ComFlor 80 profiled sheet steel decking was used with a total slab depth of 150mm and slab dimensions of 6m by 3m. The decking was connected to the main beams with two 125mm×19mm diameter shear studs every 300mm. Where secondary beams were used one shear stud was provided every 300mm. Reinforcing provided included SE82 seismic mesh across the whole slab and 1.5m lengths of D10 bar centred across beams in the direction of the deck tray. Further reinforcing was provided around the column opening in the slab as per ComFlor recommendations (Corus 2005). 30MPa concrete was used for all tests.

The type of connection, deck tray direction and slab detailing were changed in each of the tests. The details of each specimen are summarised in Table 1.

Table 1: Summary of test details.

Specimen	Deck Tray Direction (to main beams)	Beam Connection	Concrete Detailing
1	Transverse	Bolted Moment End Plate	Separated from column
2	Transverse	Bolted Moment End Plate	Poured up to column
3	Longitudinal	Bolted Moment End Plate	Poured up to column
4	Transverse	Sliding Hinge Joint	Poured up to column
5	Transverse	Bolted Moment End Plate	Poured to column, large full depth block

The majority of the tests performed used the bolted moment endplate connection shown in Figure 2. This connection was designed in accordance with the Heavy Engineering Research Association's report R4-100 (HERA 2003) and HERA Report R4-142 for the design of the column in the bolted moment resisting endplate connections.

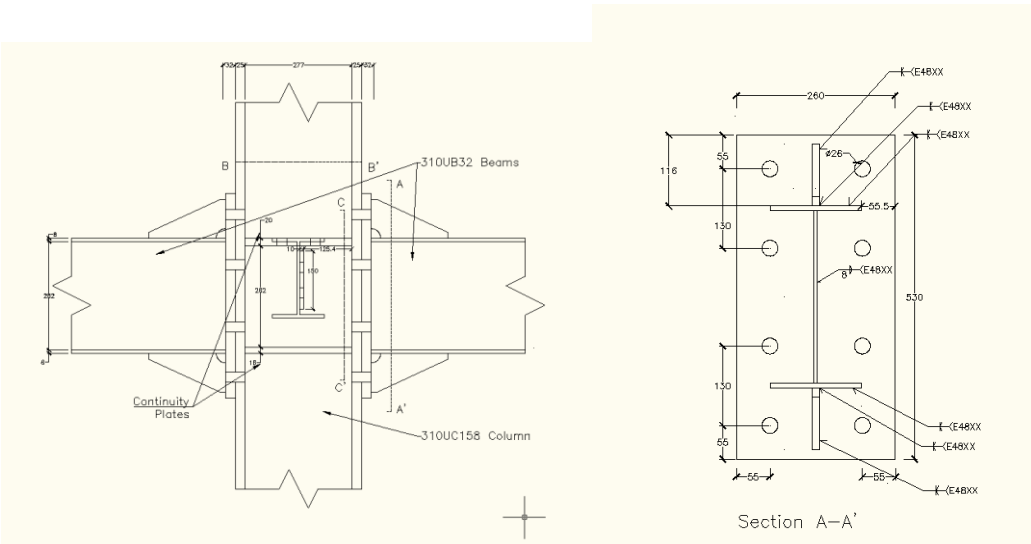

Figure 2: Bolted moment end plate connection detailing.

The specimens were subjected to a reversed cyclic loading regime base on recommendations made in ACI report T1.1-01 wherein the specimen completed three cycles at each drift level followed by a smaller cycle of approximately half the magnitude. As shown in Figure 3, drift levels varied from 0.2% to 5%. Loading was achieved by means of a ram mounted to the top of the column and drift levels were also recorded at the top of the column.

During testing, crack patterns were recorded on the slab and data was collected from the slab and the beam-column joint and panel zone regions using linear potentiometers. Following on from testing the crack patters on the slab were photographed using a 500x500mm grid.

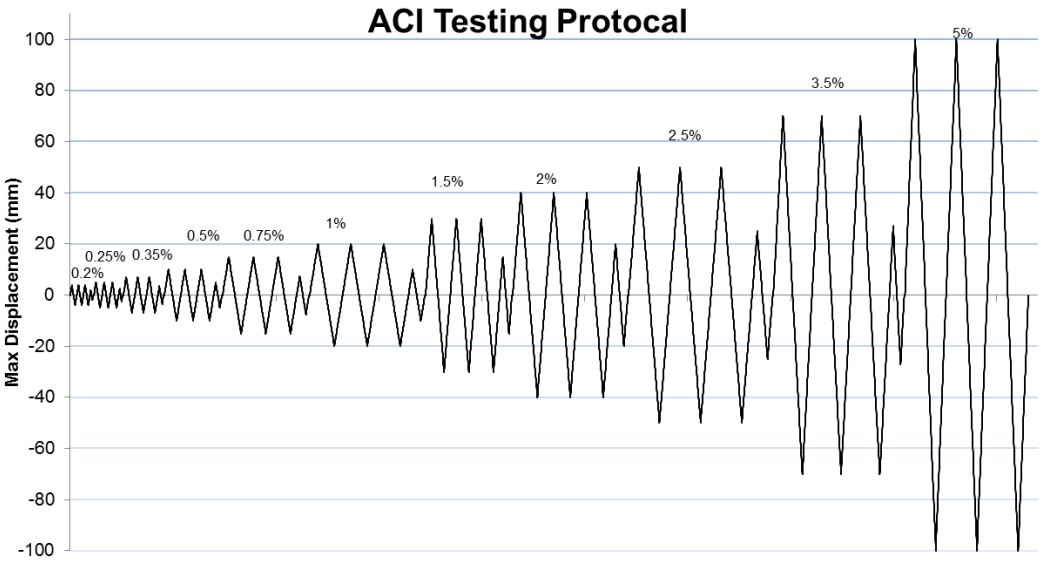

Figure 3: ACI testing protocol used in all tests.

At the time of writing, the first three tests had been completed and results processed, the fourth test was complete without processing and the fifth test was yet to be run.

Test Observations

Test 1, Slab Separated by Polystyrene

The first specimen to be tested used the standard moment end plate connection with the deck tray oriented perpendicular to the beam. Separation from the column from the column was achieved using blocks of 25mm polystyrene glued to both sides of the column flanges. The concrete slab was allowed to contact the column web.

Test Events

Testing of the first specimen occurred over 3 days with 0.2%-1.0% drift tested on the first day, 1.5% drift on the second day (followed by a control software failure) and 2%-5% on the third day.

The force-displacement behaviour was predominantly linear up to 0.5% drift followed by a long yield curve up to 3.5%. Beyond the first cycle at 3.5% drift the strength of the specimen began to decrease owing to buckling of the beams. The maximum force applied to the column was 251kN during the first cycle at 3.5% drift. This equates to a beam-level joint moment of 502kNm. Some slipping in the column base connection was noticed at approximately 50-60kN of force in both directions.

During the first cycles at 3.5% drift, the bottom flanges of both beams began to buckle just beyond the tips of the gusset plates. This buckling was more prominent during the 5% drift cycles with some deformation of the lower web also noticed. The top flanges did buckle but to a much lesser extent and no prying was observed in the moment end plate connection.

Slab Damage

Cracks began to appear from 0.35% drift with initial cracking being confined to transverse cracks running across the width of the slab. These transverse cracks appeared to form beyond 600mm from the column centreline and tended to form over the ridges of the profiled decking, where the slab was shallowest. Further transverse appeared at the testing progressed along with longitudinal cracking in the vicinity of the primary beams. From 3.5% localized spalling and diagonal cracking occurred at the column faces and around the edges of the column flanges.

As shown in Figure 4, damage to the slab surrounding the column was comparatively minimal. Spalling along the east column face was mainly confined to the top 10-20mm of the slab and spalling on the west column face was minimal. The transverse and longitudinal cracks were also comparatively minimal with crack widths rarely exceeding 0.5mm. The largest recorded crack widths were between 1.2 and 1.5mm.

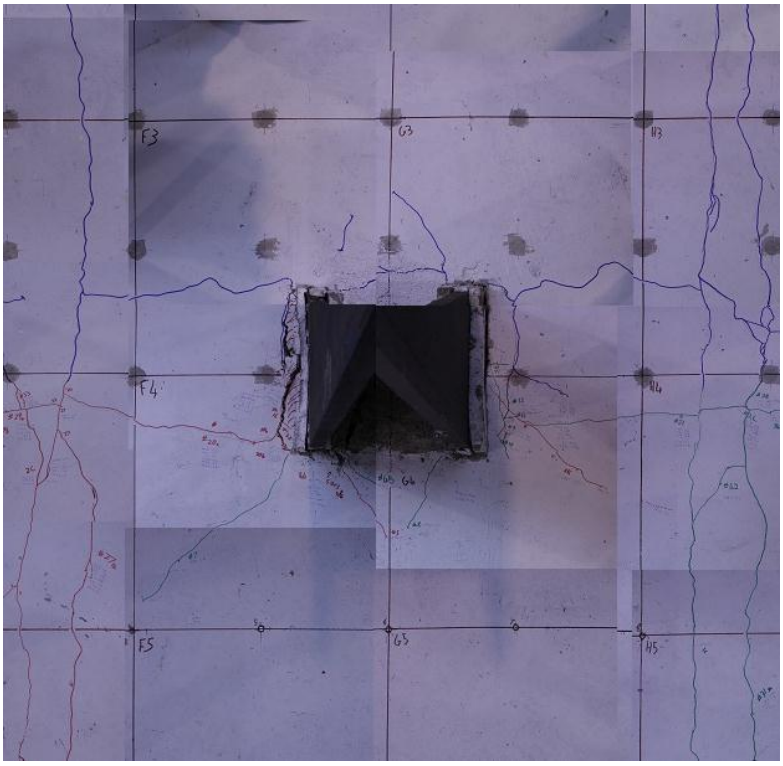

Figure 4: Slab damage in column region after all cycles of test 1.

Test 2, No Separation

The second specimen to be tested used the standard moment end plate connection with the deck tray oriented perpendicular to the beam and no slab separation. The first deck ribs were placed approximately 60-80mm from the column faces.

Test Events

Testing of the second specimen occurred over 2 days with 0.2%-1.5% drift tested on the first day and 1.5%-5% on the second day. Further controller issues were experienced with manual control required at higher forces in the 2% and 2.5% drift cycles.

Again the force-displacement behaviour was predominantly linear up to 0.5% drift followed by a long yield curve up to 2.5% at which point buckling of the beams occurred. During the first cycle at 3.5% drift the strength of the specimen dropped rapidly when the concrete at the column face spalled and the concrete between the column flanges sheared off. The maximum force applied to the column was 324kN during the first cycle at 2.5% drift. This equates to a beam-level joint moment of 648kNm.

During the first cycles at 2.5% drift, the bottom flanges of both beams began to buckle and continued to do so during the remaining cycles. The buckling of the top flange and the web was more prominent than in the first test as shown in Figure 5.

Figure 5: Damage to east (left) and west (right) beams of test 2.

Slab Damage

First cracking occurred during the 0.25% drift cycles with diagonal cracks propagating from the edges of the column flanges. This was followed by transverse cracking above the slab ribs and longitudinal cracks along the beam. Unlike the first test, transverse cracks formed above the ribs closest to the column faces and multiple longitudinal cracks were present on both sides of the primary beams. The diagonal cracks from the column flanges propagated 500-600mm into the slab, generally terminating at an intersection with a transverse crack.

Spalling of the concrete in contact with the column faces occurred during the first cycle at 3.5% drift. This was confined to the concrete between the column face and the first rib and was predominately spalling of the concrete above the deck rib. The area of concrete between the column flanges sheared away from the rest of the slab at 3.5% drift and was accompanied by a sudden loss of strength of the overall system. Following the shearing of the concrete between the flanges the vast majority of the remaining cracks on the slab decreased in width to levels closer to those experienced in the previous test with the slab separated from the column.

Damage to the slab surrounding the column is shown in Figure 6. In comparison to the first test, the extent of both the cracking and the spalling at the column faces is significantly greater as is the propagation of the diagonal cracks from the flange tips. The average crack width was also higher than in the first test.

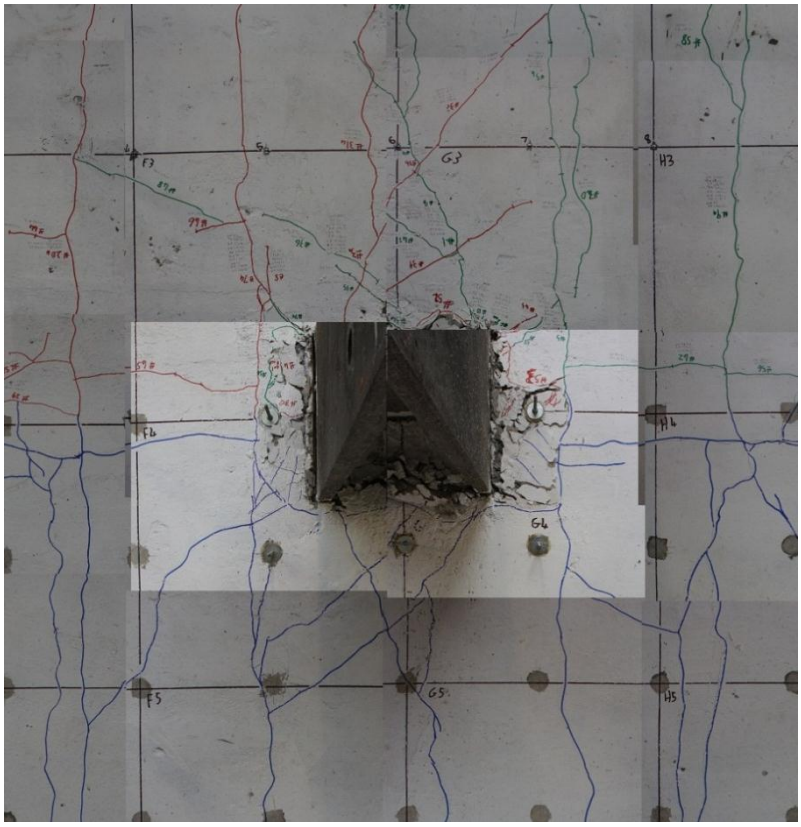

Figure 6: Slab damage in column region after all cycles of test 2.

Test 3, No Separation, deck direction changed.

The third specimen to be tested also used the standard moment end plate connection with the deck tray oriented parallel to the beam and no slab separation. The deck tray was placed with a trough running above the centreline of the primary beam. Secondary beams were also used at the column centreline and at the ends of the primary beams. Shear studs were used on the secondary beams at the column and at the end of the west beam while those at the end of the east beam were left without studs for comparison. Unlike the main beams, single studs were used on the secondary beams.

Test Events

Like the second specimen, testing of the second specimen occurred over 2 days with 0.2%-1.5% drift tested on the first day and 1.5%-5% on the second day. Again the behaviour was elastic to 0.5% drift and beam buckling was observed at 2.5% drift. Concrete spalling was noticed at 2.5% drift and the maximum force applied to the column was 365kN during the first cycle at 2% drift. This equates to a beam-level joint moment of 730kNm. As in the second test the bottom beam flanges began to buckle at 2.5% drift. Again the buckling was more prominent than in the previous two tests with the west beam sustaining significant damage as shown in Figure 7.

Figure 7: Damage to west beam of specimen 3.

Slab Damage

As in the second test, first cracking occurred during the 0.25% drift cycles with diagonal cracks propagating from the edges of the column flanges followed by transverse cracking above the slab ribs as well as longitudinal cracking. The extent of both the longitudinal and diagonal crack patterns was greater than those experienced in the first two tests. Diagonal cracking was observed both at the column and near the ends of the primary beams with multiple cracks at each location. Longitudinal cracks were observed next to the primary beam as well as approximately 500mm from the centreline of the beam. These were roughly cantered over the first and second deck ribs either side of the main beams. Average crack widths were higher than in previous tests with multiple cracks exceeding 0.8-0.9mm.

Spalling of the concrete in contact with the column faces began during the 2.5% drift cycles. In the longitudinal direction this was initially confined to the concrete between the column face and the first rib however in the transverse direction the extent of the spalling was more significant extending up to 500mm from the column centreline. Again the area of concrete between the column flanges sheared away from the rest of the slab at 3.5% drift and was accompanied by sudden strength loss. Following completion of the test and removal of the slab beside the beams cracking was noticed approximately 50mm from the top of the slab. Upon closer inspection it was discovered that the top 50mm of concrete above both beams had broken away from the remainder of the slab, as shown in Figure 8.

Figure 8: Separation of cover concrete above main beam.

Damage to the slab surrounding the column is shown in Figure 9. In comparison to the first two tests, the extent of both the cracking and the spalling at the column faces is noticeably higher.

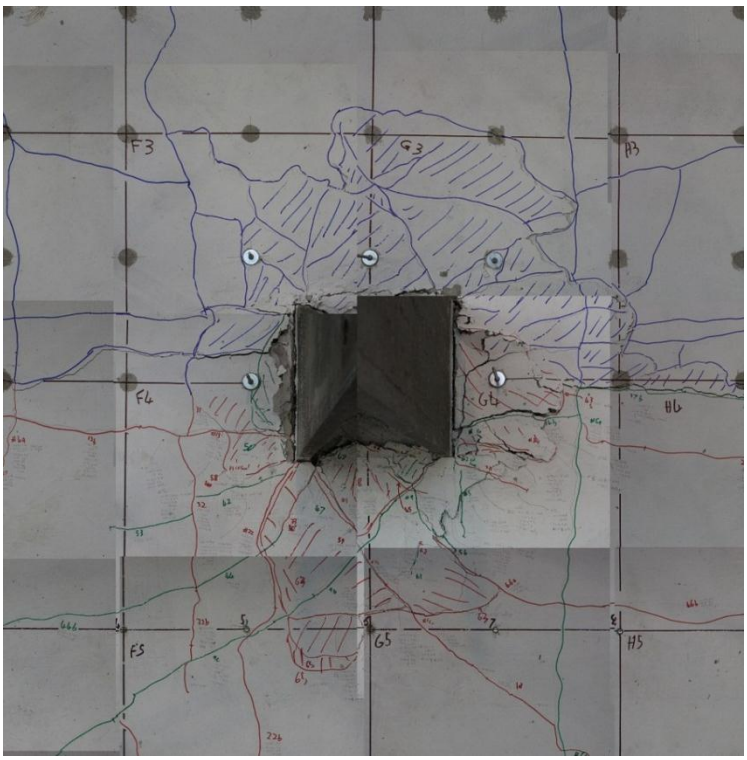

Figure 9: Slab damage in column region after all cycles of test 3.

Sliding Hinge Joint

The fourth specimen was used to test an asymmetric friction type connection with slab attached.

The first part of the testing was to put the sliding hinge joint through the displacement protocol applied to the other specimens. The connection came through this well with the only visible damage being the shearing of one web plate bolt at 5% drift due to vertical displacement incompatibility. As in the third test, the slab spalled at 3.5% drift with a corresponding loss of strength.

Following on from this the specimen was put through 50 cycles at 2.5% drift, 7 cycles at 5% drift and 1 cycle at 10% drift (although the ram ran out of travel at +8.5% drift). At these higher drifts a further 2 web plate bolts sheared off and some deformation was noticed in the flange plates of the sliding hinge joint and the bottom flange of the beam. As shown in Figure 10, despite a drop in strength from the first stage of testing, the connection still provided a very stable hysteresis loop during the second stage of testing.

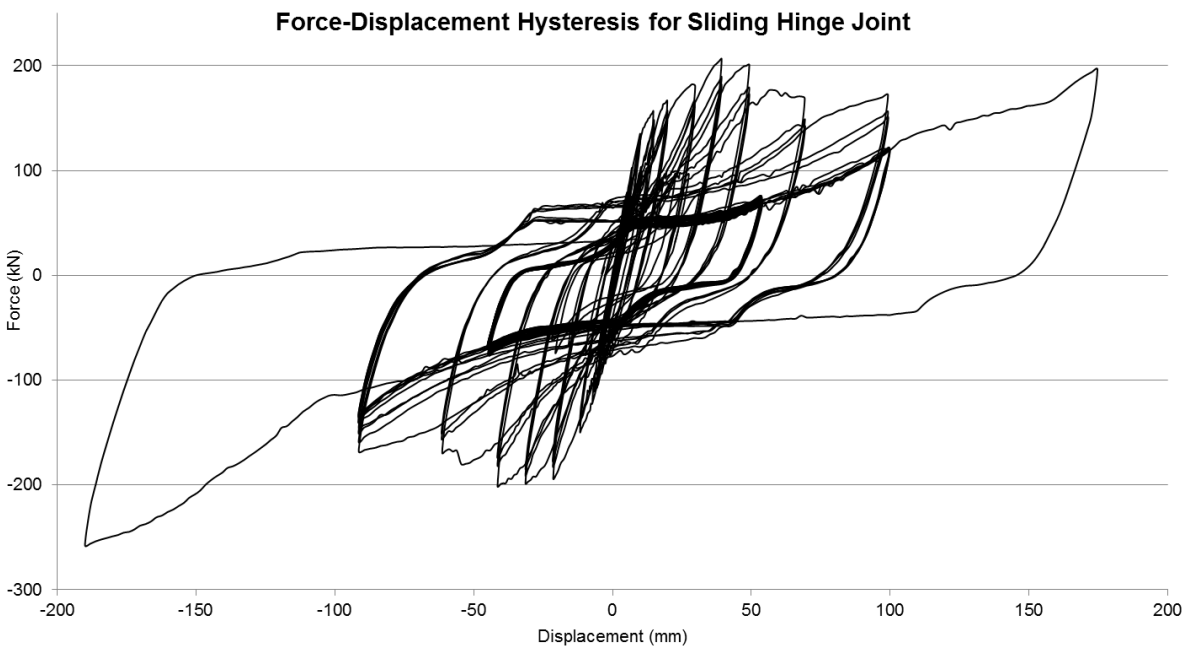

Figure 10: Force-displacement hysteresis for sliding hinge joint.

Comparison of results and Discussion

Table 2 shows the maximum applied force, residual strength and capacity as predicted by NZS3404 (note for test 1 this is based on the section capacity of the steel beam only), as well as events leading to significant strength loss in each test. Because testing is currently underway, many results are still to be obtained (TBO), or to be analysed (TBA). The predicted loads are currently based on nominal f_y values.

Table 2: Strength and failure mode data from each test.

Specimen	Maximum Recorded Strength (kN)	5% Drift Residual Strength (kN)	Predicted Load (kN)	Failure Mode
1	251	231	168	Beam Buckling @ 3.5% Drift
2	324	212	140	Beam Buckling @ 2.5% Drift, Concrete spalling @3.5% Drift
3	365	240	217	Beam Buckling @ 2.5% Drift, Concrete spalling @ 2.5% Drift
4	TBA	TBA	TBA	Concrete spalling @3.5% Drift
5	TBO	TBO	TBO	TBO

The columns were designed to avoid inelastic damage and preliminary results and observations indicated that movements in the panel zone of the column were minor.

Figure 11 shows the hysteresis loops for specimens 1, 2 and 3 from 1% drift to 5% drift. The results of Specimens 1 and 2 are still to be corrected for base plate slip. It may be seen that the peak strengths of Specimens 2 and 3 are increased because of the slab effect compared to Specimen 1. Also, once the shear key locking effect is lost at a drift of 3.5% (70mm), the hysteresis loops become similar.

Figure 11: Force-displacement hysteresis for specimens 1, 2 and 3.

By comparing the results of Specimens 1 and 2 in Table 2 and Figure 11, we see the effects of separating the slab from the column. As predicted the separation of the slab resulted in a decrease in the strength of the beam-column assembly by approximately 25%. Comparing the maximum strengths it can be seen that at its maximum the slab in contact with the column resulted in a 70kN increase in strength or approximately 140kNm in beam-column joint moment. This strength increase did however come at the expense of ductility. Not only did the beams in the second specimen buckle earlier than in the first but the slab of the second specimen sustained a much higher level of damage. It can be noted however that, once the concrete surrounding the column spalled, the crack widths reduced to the levels of the separated specimen.

Comparing the results of Specimens 2 and 3 in Table 2 and Figure 11, the effect of deck tray direction can be seen. Running the deck longitudinally as done in test 3 allows the full depth slab found in the troughs of the deck tray to be run back into the slab. This gave a 10% increase in strength although this again came at the expense of durability. The slab on specimen 3 sustained significant damage throughout its length which would be difficult to repair without having to replace part of the floor. In this case the use of slab separation seems a sensible option to reduce damage.

Throughout the testing the methods of strength losses were consistent. The first item to fail was usually the beam with buckling of the bottom flanges. In all the non-isolated tests this was followed by shearing of the concrete between the column flanges and the spalling of the concrete at the column faces. This order may be different for different combinations of beam and slab however it does show the strength of the slab as being significant. In particular the section of slab between the column flanges provided a great deal of resistance up to 3.5% drift. Studies by Braconi (2008) concluded that the role of this section in transferring forces from the slab into the column was insignificant however the resistance provided by this section is clearly not insignificant and may warrant further investigation. It is also interesting that the strengths at drifts greater than 3.5% of all three specimens are close indicating that once the concrete spalled it offered little in the way of further resistance.

The peak predicted strength in Table 2 assumes the steel yield strength has been increased by the NZS3404 flexural overstrength factor of 1.25 and that the slab effect has been included according to Equation 12.10.2.4 of NZS3404. It may be seen that the actual strength of the isolated slab subassembly (Specimen 1) has an overstrength of 1.87, rather than the 1.25 given in NZS3404. This may also be a contributing reason for the other specimens to have higher than predicted strengths. At the time of writing, tensile testing of the beam sections had not yet been undertaken as part of the ongoing work.

Conclusions

From the above comparisons, the following conclusions can be drawn from this research:

- Isolation of the column from the slab results in a system with lower strength than that with slab contact, but with an increased overall ductility and less slab damage. This system does require considerations for the transfer of horizontal axial force from the slab through the beams into the column due to the lack of slab contact.

- In the non-isolated specimens, when the deck tray ran parallel to the main beams there was more damage than when the slab ran in the transverse direction. This is because in the longitudinal direction full depth slab continues along the beam from the column face. This allows bearing forces at the column face to be developed without failure further back in the concrete. For transverse decks, the full depth concrete continues no more than one trough spacing away from the column face making the concrete more susceptible to compression failure.

- In the non-isolated endplate specimens strength loss occurred in the following sequence:
    - Buckling of the beam flanges beyond the gusset plates.
    - Shearing of the concrete between the column flanges from the remainder of the slab.
    - Spalling of the slab at the column faces.

  The most significant strength loss occurred at the time of the shearing of the concrete between the flanges, indicating that the inter-flange shear key locking effect significantly increased the strength of the frame. Also, buckling of the beams always occurred beyond the gusset plates of the end plate connection. For this reason the length of the beam without shear studs (taken as 1.5 times the depth of the beam in NZS3404) should probably be measured from the tip of the gusset plate.

- The sliding hinge joint connection sustained large drifts with little visible damage. Primary loss of strength was due to spalling and shearing of the concrete slab around the column. Also shearing of some top web plate bolts occurred at drifts greater than or equal to 5%.

- The NZS3404 method to consider slab effects when computing beam overstrength underestimated the peak strengths measured. This is because the steel section alone provided an overstrength factor of 1.87 which is significantly greater than that of 1.25 assumed in NZS3404. Possible design recommendations for considering slab effects are included in NZS 3404 and are being evaluated in the light of these test results

Acknowledgments

This work has been financed by the Ministry for Science and Innovation through the Natural Hazards Platform under the Composite Solutions project. Materials and manufacturing have been donated by Fletcher Steel, John Jones Steel and Tata Steel (ComFlor).

References

American Concrete Institution, 2001. *T1.1-01: Acceptance Criteria for Moment Frames Based on Structural Testing,* Farmington Hills, Mich, USA.

Braconi, A., et al., *Seismic performance of a 3D full-scale high-ductility steel-concrete composite moment-resisting structure - Part II: Test Results and analytical validation.* Earthquake Engineering and Structural Dynamics, 2008 (37): p. 1635-1655.

Chorus New Zealand, 2005. *ComFlor 80 Composite Floor Decking,* Auckland, NZ.

Heavy Engineering Research Association, 2003. *R4-100 Structural Steelwork Connections Guide, Part 1: Design Procedures*, Manakau City, NZ.

New Zealand Standard (NZS 3404:1997), *Design of Composite Members and Structures*, Standards New Zealand, Wellington