Heavy Brace Gusset Plate Connections for Braced Steel Frames

Author: *Alistair Fussell*
Affiliation: *Steel Construction New Zealand Inc.*
Date: *20th July 2011*
Ref: *CON1301*

Key Words
Gusset plates, uniform force method, ductility, frame action, concentrically braced frames, hollow sections

Introduction

Heavy brace gusset connections for the purposes of this paper are defined as gusset plates that connect large tubes (circular and square) or buckling restrained braces used in braced frames (concentric and eccentric) for medium and high rise applications. This includes both corner and midspan gusset plate connections (figure 1). While the guidance in this paper pertains principally to gusset plate connections, the principles will also be applicable to UC brace/beam/ column connections. Reference is made to HERA Design and Construction Bulletins (Clifton 1998, 2000, and 2001) that cover this situation.

Figure 1: A Concentrically Braced Frame Featuring Hollow Section Braces and Mid-span and Corner Gusset Plate Connections

In concentrically braced frames the brace elements are the primary seismic resisting elements that dissipate energy by yielding or buckling. As a result of this and other differences in the inelastic behaviour of CBF compared to EBF systems, gusset plate connections for CBF systems are subject to greater ductility demand, both in-plane and out of plane than for EBF systems.

This paper begin with a consideration of the seismic behaviour of gusset connections based on a review of past and current research programmes into the seismic behaviour of gusset plate connections for CBF systems. Various equilibrium models including the Uniform Force Method will also be discussed for calculating the design actions on the interfaces of gusset plate brace/beam/column connections. The Uniform Force Method includes a

restriction that makes it hard for designers to always achieve compact gusset plate connections. A revised formulation to the traditional UFM procedure which allows greater range of plate geometries is discussed.

One of the requirements for seismic design to section 12 of the Steel Structures Standard (SNZ, 1997), is that the connections must possess adequate ductility to sustain the inelastic demands imposed on them during a design level earthquake event. Guidance is provided on how to achieve ductile behaviour of gusset plate brace/beam/column connections.

The behaviour of midspan gusset plates in a seismic event is different to corner gusset plate connections. These differences will be discussed with recommendations given for designing midspan gusset plate connections.

Seismic Behaviour of Gusset Plate Connections

Introduction

The seismic performance of gusset plate connections has been the subject of a long term North American research programme led by Charles Roeder. In particular they have focused their attention on the performance of corner and midspan connections for concentrically braced frames (CBF) with braces effective in compression and tension. The reason for the interest in CBF systems is that the connections must be capable of withstanding cyclic brace buckling behaviour. This out of plane behaviour, see figure 2, imposes large rotation demands on the brace and the brace connections.

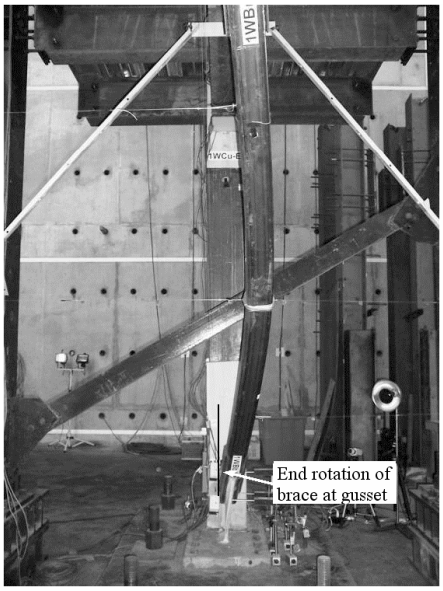

Figure 2: A Gusset Plate Connection Subject to Out of Plane Rotation (Roeder and Lehman, 2008)

Corner gusset plate behaviour has been reasonably well investigated, however there has been little attention given to midspan gusset plates (Roeder and Lehman 2008). The behaviour of these connections are quite different to corner gussets as midspan gusset plates have less edge restraint and they are not subject to additional actions induced by frame action.

The stress and strain distribution in gusset plates is very complex. Therefore most design standards provide simple design and detailing rules to approximate this complex behaviour and to ensure adequate performance.

Summary of Past Gusset Plate Research

Roeder and Lehman (2008) provide a useful summary of past research into gusset plate connections. Prior to the recent North American research programme led by Charles Roeder, the experiments invariably involved connection tests only and neglected frame behaviour, and for the most part were monotonic resistant tests rather cyclic tests focusing on inelastic deformation capacity.

A review of the results from past testing has confirmed the following.

a. Buckling Capacity of Gusset Plate Connections

The traditional approach to deriving the design capacity of a gusset plate in compression has been to use the Whitmore width concept in conjunction with an effective length factor to allow the gusset plate to be treated as a column element.

For corner gusset plates, Thornton has suggested an effective length factor of $k_e = 0.65$ is applicable in this situation. NZS 3404 (clause 12.9.7.2(b)) specifies a similar value of 0.7. Comparison of previous test results has shown this method to be conservative (figure 3).

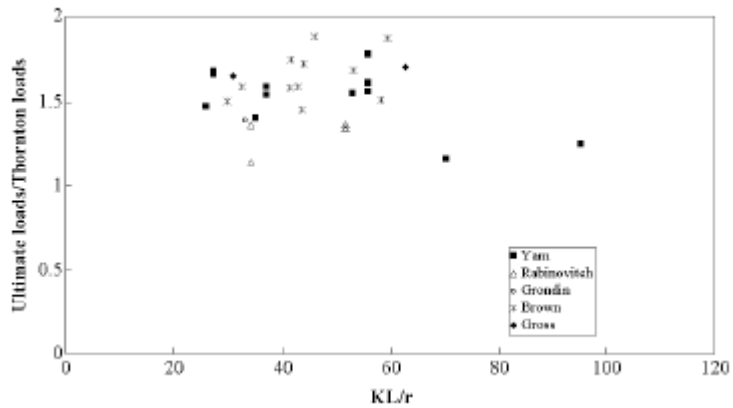

Figure 3: Comparison of Measured Gusset Plate Buckling capacity to Predicted by Thornton Model as a Function of Plate Slenderness Ratio (Roeder and Lehman, 2008)

b. In-plane Stability Unsupported Compression Edge of Plate

Design rules have also been proposed for the free length of gusset plates when there are compressive stresses perpendicular to the free edge of the plate (Brown 1998, Astaneh-Asl, 1989). These were not found to provide reliable estimates of plate compression capacity limited by edge buckling. An example of edge buckling is shown in figure 8b. There was significant scatter of results. The ratio of actual ultimate loads/predicted loads varied from 0.2 to 7 (figure 4). They concluded that none of the methods were supported by the experimental results (Roeder et al., 2008). There is an edge slenderness check given in the HERA New Zealand Structural Steel Limit State Design Guide Volume 1 (Clifton, 1994). This is apparently based on a equation from a British composite bridge design standard for bridge truss gusset plate design. The author is not aware of any cyclic experimental testing to verify the use of the equation for seismic applications.

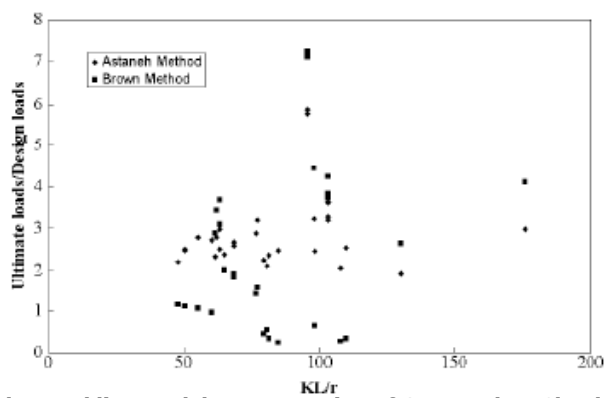

Figure 4: Accuracy of Edge Buckling Models as a Function of Gusset Plate Slenderness (Roeder and Lehman, 2008)

c. Findings/ Recommendations of Roeder et. al

Based on the research to date, Roeder et. al (2008) has suggested the following:

1. Brace end clearance model (out of plane ductility for CBF systems: Braces effective in compression and tension)

   The proposed $8t_p$ elliptical clearance model provided similar or better seismic performance while resulting in more compact connections than the current 2t model (figure 5). The benefits of more compact sections in terms of reduced joint stiffness are discussed in the next point.

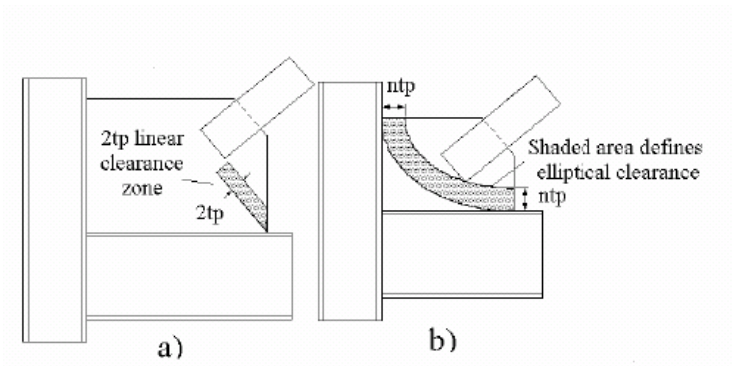

Figure 5: Clearance Models for Brace Buckling Deformation a) 2t rule b) proposed 8t elliptical rule

2. In plane Gusset Plate Ductility

   Gusset plate connections must be designed for in-plane ductility. The reason for this requirement is that gusset plate connections, figure 7, are relatively rigid for in-plane bending. During severe seismic events, braced frames experience large deformations that can result in inelastic connection demand and local yielding of beams and columns (Lehman et al. 2008). In this instance, appropriate capacity design is required to ensure the additional frame actions generated by these deformations, are considered in the design of the secondary elements, and the joints are appropriately designed and detailed to ensure ductility. This is more of an issue for concentrically braced frames where the frame deformations will tend to open and close gusseted connections (figure 6a). In contrast for eccentrically braced frames the frame displaced shape when subject to large inelastic demand will not cause such large opening and closing actions (figure 6b).

   Further evidence of this phenomenon was observed by Lopez et. al. (2004). During testing of a full scale two storey frame with gusset plate connections, (figure 8a), researchers noted free edge buckling of a gusset plate during cyclic testing of a buckling restrained brace system (figure 8b). The interesting aspect of this behaviour was that the brace was in tension at the time. The frame interstorey drift when edge buckling occurred was 2.5%. The edge buckling was attributed to closing of the joint due to frame action (figure 7).

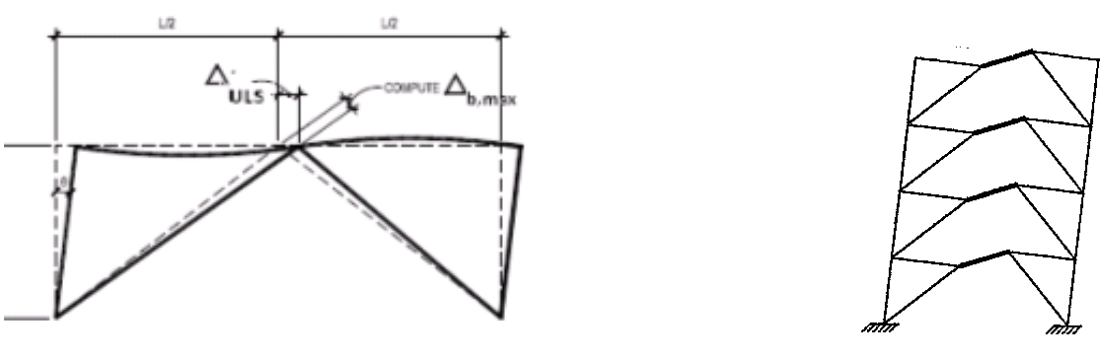

(a) **(b)**

Figure 6: Inelastic Deformed Frame Shapes a) Concentrically Braced Frame b) Eccentrically Braced Frame

   Research by Roeder (2008) has shown that the inelastic demand on gusset plate connection is sufficient to initiate cracks in the corner of welded gusset plates due to the diagonal plate stresses induced by joint opening and closing at storey drifts of about 2%, see figure 7.

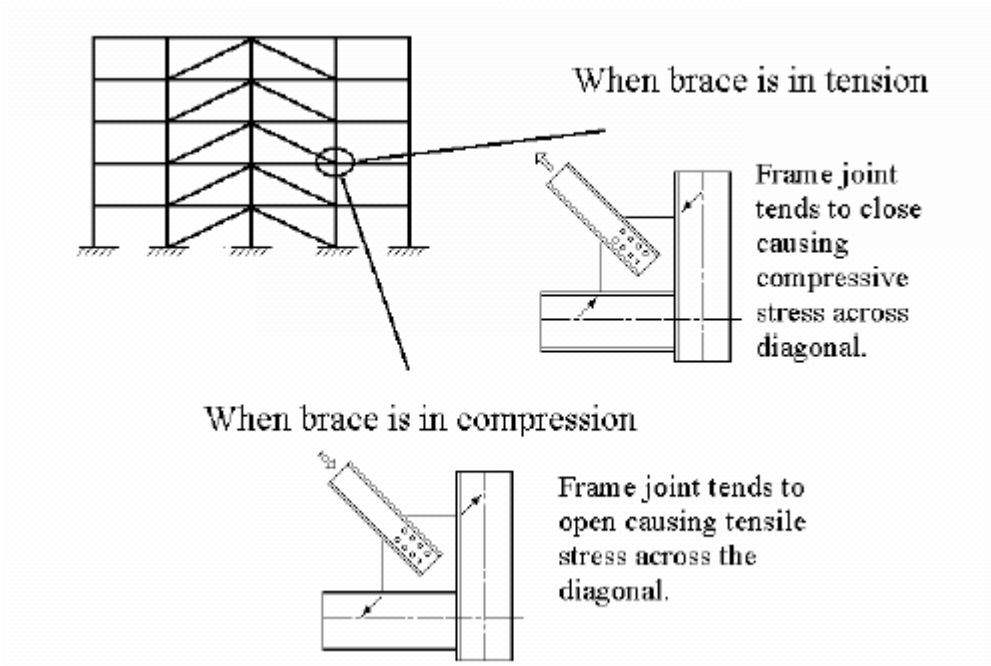

Figure 7: Cross Diagonal Stresses in Welded Gusset Connections (Roeder and Lehman, 2008)

They found if the gusset plate welds were sized for the tensile capacity of the plate, the cracks remained stable, allowing the joint to continue to dependably sustain inelastic demand even up to greater interstorey drifts. This cracking was noted regardless of the gusset plate design. Since this was a deformation induced demand, there was little benefit in increasing plate size or thickness as this only attracted larger stresses. In fact this is a good reason to make the joint as compact as possible. This requirement to size the gusset welds for the plate tensile capacity is consistent with the guidance given in the commentary to NZS 3404.

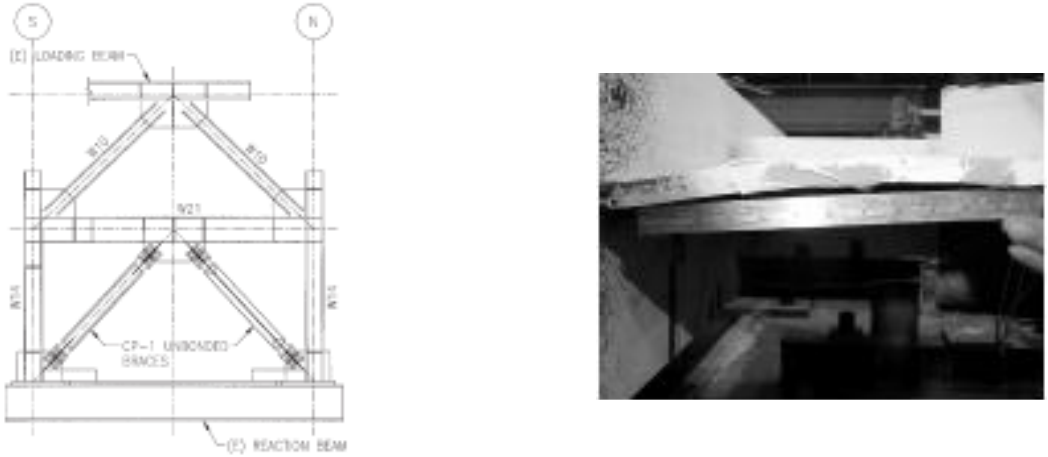

(a) **(b)**

Figure 8: Two Storey Experimentally Tested BRB Frame a) Frame Elevation b) Buckling of Free Edge of Gusset Plate (Lopez et. al., 2004)

3. Midspan Gusset Plates

(a) Photograph of midspan gusset

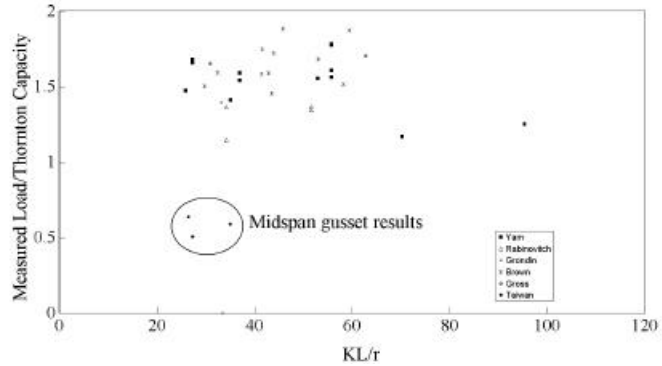

b) Comparison of measured compression to corner gusset data and design models

Figure 9: Midspan Gusset Plate Buckling Observed in 3 storey Full Scale Test (Roeder, 2008)

With only one edge restrained, midspan gusset plates have significantly less resistant to end rotation and hence the probability of gusset plate buckling is increased. The rotational restraint provided to the plate by the beam and the floor system is therefore important to the buckling behaviour of the plate. They suggest a more conservative approach is required to the design of midspan gusset plates (figure 9b). They recommend the effective length factor k_e be increased to 1.4. Furthermore, vertical stiffeners should be installed and a parrallel $8t_p$ brace end clearance model utilised, see figure 10.

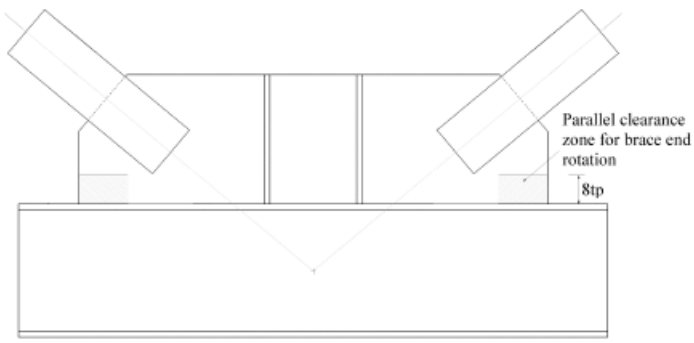

Figure 10: Proposed 8t Parallel Clearance Model for Midspan Gusset Plate Connections (Roeder et. al, 2008)

4. Strength Hierarchy

Roeder et. al. (2008) proposed a strength hierarchy for CBF brace and gusset plate connections to promote ductile behaviour. This involved suppressing undesirable failure modes such as plate fracture bolt and weld fracture in favour of more ductile limit states as plate yielding.

Analysis of Gusset Plate Connections

Introduction

The first step in designing corner gusset plate connections is to establish the design actions. Over the years a number of simple methods, all satisfying static equilibrium, have been used for establishing plate support forces such as the Uniform Force Method, Truss Analogy, Parallel Force Method and the KISS method. Of these, the method adopted in the AISC Manual of Steel Construction (2005) for determining forces on the gusset interfaces is the Uniform Force Method. Of the methods considered at the time, this was found to provide the best means for the safe and economic design of diagonal brace connections (Muir 2008).

The Uniform Force Method is based on the lower bound theorem. This theorem states: If a distribution of forces within a structure (or connection, which is a localised structure) can be found, which is in equilibrium with the external loads and which satisfies the limit states, than the externally applied loads is less than or at most equal to the load that would cause connection failure. In other words, as long as sufficient ductility is present and all

applicable limit states are satisfied, design can proceed based on any arbitrary distribution of forces, as long as the distribution satisfies equilibrium.

Description of the Uniform Force Method

The goal of the Uniform Force Method is to obtain a statically admissible force distribution which would produce no moment at the connection interfaces and would be applicable to a wide range of geometries (Muir 2008). In the absence of moments, these connections may be designed for shear and normal forces only.

For the force distribution show in the free body diagrams, figure 11, to remain free of moments on the connection interface, the following expression must be satisfied.

$$\alpha - \beta \tan\theta = e_b \tan\theta - e_c \qquad \text{(eqn. 1)}$$

Once α and β have been determined, the factored axial and shear forces at the gusset interfaces can be computed using the following equations.

$$H_b = \frac{\alpha}{r} P$$

$$V_b = \frac{e_b}{r} P$$

$$H_c = \frac{e_c}{r} P$$

$$V_c = \frac{\beta}{r} P$$

where:

$$r = \left((\alpha + e_c)^2 + (\beta + e_b)^2 \right)^{\frac{1}{2}}$$

The basis for the uniform force method is that the forces at the gusset to column interfaces, $\sqrt{V_c^2 + H_c^2}$, and gusset to beam interfaces, $\sqrt{V_b^2 + H_b^2}$, are required to pass through working points at (o, e_b) and (e_c, o) respectively, see figure 11.

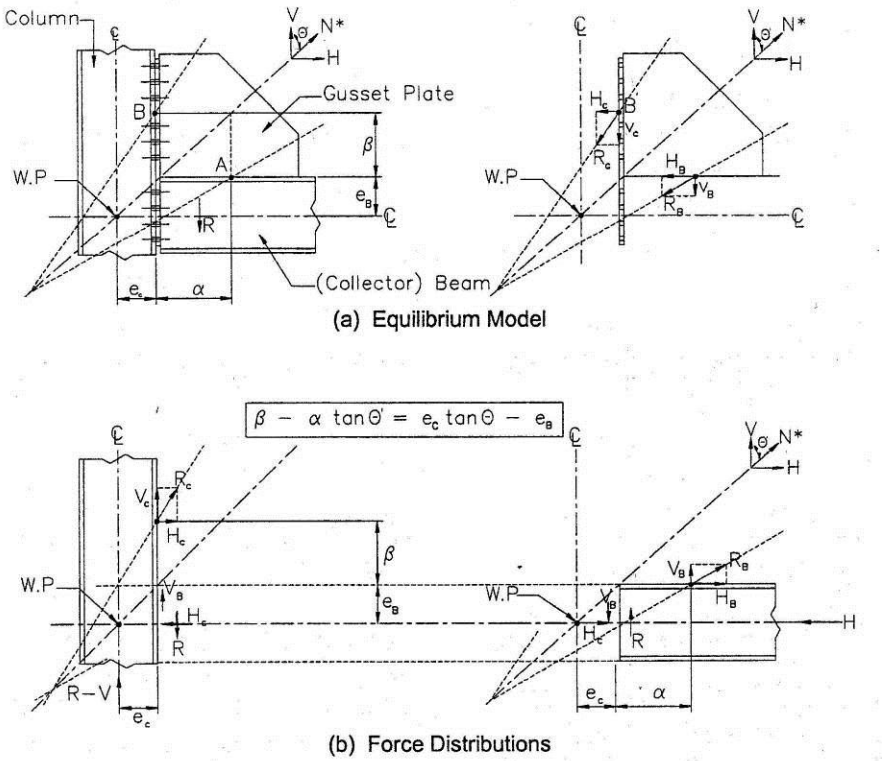

Figure 11: Uniform Force Method Equilibrium Model Beam/Brace/Column Connection (Clifton, 1998)

This arbitrary requirement to pass the gusset to column interface force through a working point at (o, e_b) can result in oddly shaped or disproportionally large gusset plates. Muir (2008) has suggested a slight modification to the Uniform Force Method that removes this requirement for the gusset to column interface actions to pass through the point (0, e_b). It therefore, still provides statically admissible solutions with no moments at the gusset to column, gusset to beam and beam to column interfaces, while providing solutions for a wider range of plate geometries.

The original Uniform Force Method can still be applied to gusset geometries that do not comply with equation 1. However, if this approach is adopted, moments will be introduced to either one or both of gusset plate interfaces to ensure equilibrium. This case is described and illustrated by way of worked example in AISC (2005).

Special case 1: Modified Working Point

There are cost and performance advantages in detailing compact gusset plate connections (Roeder and Lehman 2008). The size of gusset plate can, depending on the connection geometry, be reduced by allowing eccentric working points (figure 12). This noding eccentricity will introduce additional bending actions in either or both of the beam or column elements.

The eccentricity, e, of the line of the brace with respect to the working point of the frame centre lines can be computed as follows (Tamboli 2010):

$$e = (e_b - y)sin\theta - (e_c - x)cos\theta$$

The total moment due to noding eccentricity is:

$$M^*_{noding} = P.e$$

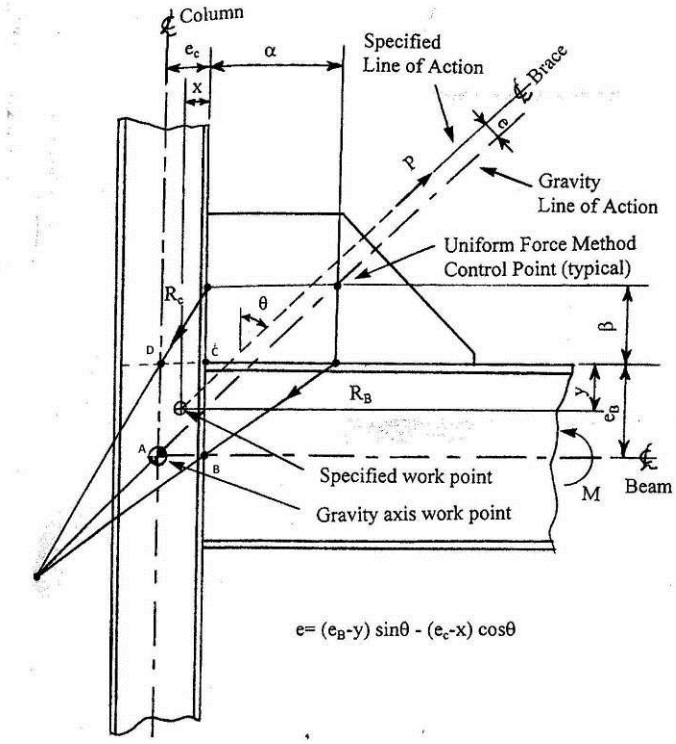

Figure 12: Non-concentric Working Points (modified Tamboli, 2010)

To determine the gusset interface actions and the frame moments, the following requirements will apply:

1. Moment equilibrium about the beam/ column working point must be established.
2. There must be no moments at the gusset plate interfaces or the beam/ column connection.

The beam moment is:

$$M_b^* = H_b e_b - V_b \alpha$$

The column moment about the frame centreline working point (point A) is:

$$M_c^* = H_c (e_b + \beta) - V_c e_c$$

For equilibrium about working point A:

$$\Sigma M_A = H_c (e_b + \beta) + H_b e_b - V_b \alpha - V_c e_c - P.e = 0$$

and

$$M_b + M_c = P.e$$

The steps involved in establishing the distribution of connection design actions associated with eccentric noding are:

1. For the selected working point calculate e and P*e.
2. Use an appropriate equilibrium method to establish the gusset interface forces (V_c,H_c,V_b,H_b). In this instance y is used in lieu of e_b and x is used in lieu of e_c (see figure 12).
3. Calculate column and beam moments M_c and M_b respectively.
4. Check equilibrium has been established.

A range of working point locations can be used for the connection shown in figure 12. The use of a node point at location b eliminates any transfer of the horizontal component brace force to the column. The distribution of gusset plate interface forces can be determined by using e_c=0 in the original or modified Uniform Force Method.

The column will be subject to a moment equal to the vertical component of the brace force acting on the column face. If the column length and stiffness are the same above and below the floor level, the column moment will be shared equally above and below the connection. i.e.

$$M_{col} = \frac{V_c e_c}{2}$$

where:

$$M_{col} = P \cos\theta . e_c$$

The collector beam will not be subject to any moment as the working point is located at the beam centreline.

The AISC Steel Construction Manual (2005) includes an example for the working point at location C. When this approach is adopted the gusset interfaces are only subject to shear forces only. In this instance the gusset interface design actions are computed with e_b and e_c set to zero. Moments equal to $V_b e_b$ and $V_c e_c$ are required to re-establish connection equilibrium. The distribution of the column moment will be the same as for the example with the working point located at point B.

The beam and column elements must be designed for the additional flexural actions.

Some issues to consider in identifying a preferred working point location are:

1. Column sizes are generally governed by axial loading. They can therefore often accommodate additional moments due to noding eccentricity without requiring a change in member size.
2. It is desirable to minimise tension forces on endplate connections, particularly the gusset to column connection as this will result in smaller flange tension forces that have to be accommodated by the column.
3. Large interface actions (shear, tension or compression), impose large shear, tension or bearing demands on the webs of the beams or columns that may govern the sizing of these elements.

Special case 2: Minimise beam shear reaction

If the beam force R (figure 11) is large and acts in the same direction as V_b*, it may be desirable to redistribute some or all of it to the column connection (Clifton 2000). In this case the gusset plate acts as haunch to transfer the vertical ΔV from the beam to the column interface connection. This adjustment of vertical shear force disrupts equilibrium (Muir 2008). If it is preferable to avoid moments at the gusset to column and beam to column interfaces, an additional moment must be introduced at the gusset to beam interface. The magnitude of this moment is:

$$M_b = H_b e_b - (V_b - \Delta V)\alpha$$

Note this moment connection is easier to achieve if the gusset plate is welded directly to the beam rather than an endplate detail.

Column Moments

Column moments are present even for concentric connections. The magnitude of this moment is given by:

$$M_{c,noding} = max[V_c e_c, (V_c e_c - H_c(e_b + \beta))]$$

In addition there will be moment due to the eccentric beam shear force equal to:

$$M_{c,ecc,shear} = R.e_c$$

The moment due to eccentric shear loading should be distributed to the column in accordance with NZS 3404 clause 4.3.4.3. When combining the moments due to these effects, account should be taken of their sign. This moment should be added to the other capacity design derived column actions.

Design of Gusset Plate Connections

Introduction

The geometry of gusset plate connections is dictated by the layout of the brace and collector beam elements, the fastener and weld arrangement and if the brace can buckle, such as occurs in some concentrically braced frames, minimum brace clearance requirements.

A commonly used connection for heavy braced frames is to slot a hollow section brace symmetrically over a gusset plate. The brace is often held in position temporarily on site with an erection bolt and site welded in place. A bolted endplate connects the brace and collector beam to the column, see figure 13.

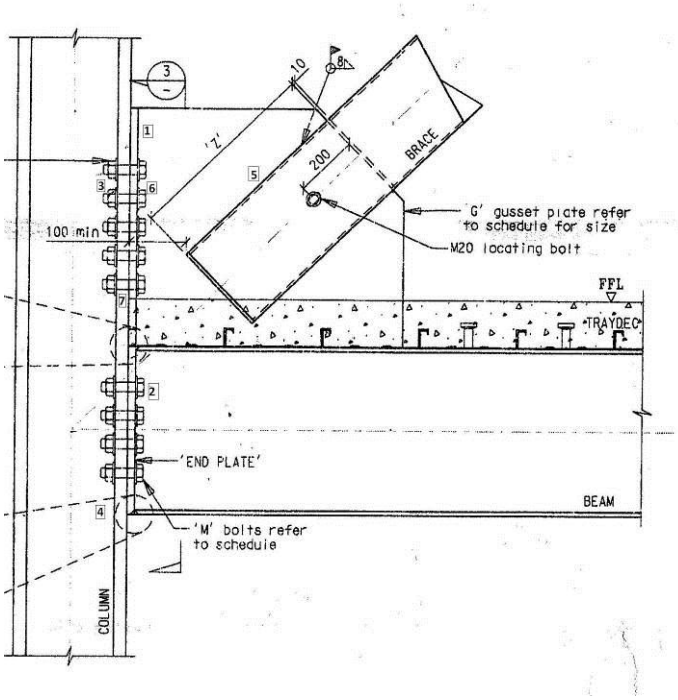

Figure 13: Gusseted Hollow Section Brace/Beam/Column Connection

The design of the gusset plate, endplate, welds and bolts for this connection will be covered in the following sections. Another form of heavy brace connection which is similar but involves a UC brace is shown in figure 14 The detailed design of this type of connection is discussed in HERA Design and Construction Bulletins DCB no. 47 and 56. The methodology is illustrated by way of worked example in DCB no. 61. These Design and Construction Bulletins are available free of charge from the HERA website, www.hera.org.nz. To reference the documents, click on the Structural Systems division tab on the HERA home page.

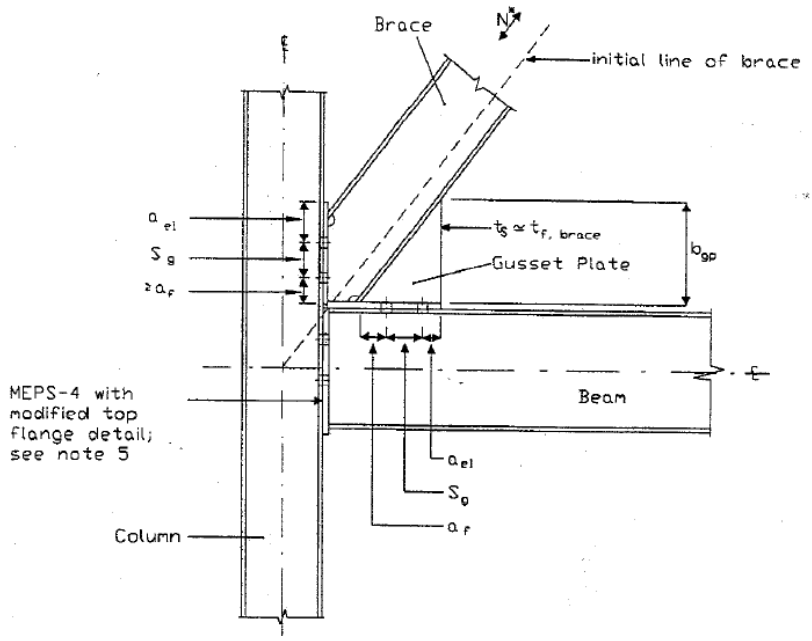

Figure 14: UC Brace/Beam/Column Connection (Clifton 2000)

Designing Gusset Plate Connections for Ductility

According to NZS 3404 (SNZ, 1997), connections must exhibit dependable strength and ductility in order to maintain the integrity of the structural system throughout the expected range of seismic induced deformations determined in accordance with this Standard and the Loadings Standard (SNZ. 2004). The principle means for achieving ductility is to promote ductile mechanisms and suppress undesirable modes of connection behaviour.

For example, for the connection shown in figure 13, the undesirable modes of behaviour are:

1. Weld failure (gusset plate to endplate or gusset plate to beam)
2. Bolt fracture (shear or tension)
3. Column flange tension yielding
4. Column web crippling adjacent to the collector beam bottom flange
5. Block shear failure

The desirable modes of behaviour for the same connection are:

6. Endplate yielding in tension
7. Enlarging of bolt holes

The following approach is suggested to achieve the desired ductile connection behaviour.

1. Design the gusset and endplate for the design actions determined using an appropriate equilibrium model such as the uniform force method.
2. Size the gusset interface welds to carry the tensile design capacity of the gusset plate.
3. Suppress mode 3 behaviour (bolt tensile failure) when sizing the endplate. This will be discussed further in section 4.3.
4. Ensure the ply material in the bolt connections does not exceed the maximum value given by the following equation

   $t_{p,max} \leq 0.9\ d_f$

   where:

   t_p is the endplate thickness
   d_f is the endplate bolt diameter

   This equation is taken from Clifton (2005). It is intended to ensure there is local oversizing of the bolt holes before the bolt experiences shear failure.

5. To protect the column flange from tension yielding, the tensile design capacity of the endplate must be less than that of the column flange. It is expensive to add tension stiffeners, therefore the endplate should only be the minimum thickness required to transfer the design actions. This requirement will typically be satisfied if the flange is thicker than the endplate. Calculations are required to confirm this strength hierarchy has been achieved.
6. Strategies for preventing crippling of the column web adjacent to the collector beam bottom flange include:
    i. Stop the flexible endplate 30mm short of the inside face of the beam bottom flange (DCB no. 47, Clifton (1998)), see figure 15
    ii. Assume frame action generates a flexural moment in to the collector beam equal to its section capacity ϕM_s. Check the column web for a concentrated compression load equal to the compression capacity of the bottom flange ie. $N^* = \phi A_f f_y$. The basis for this approach is discussed in Fussell (2010a).

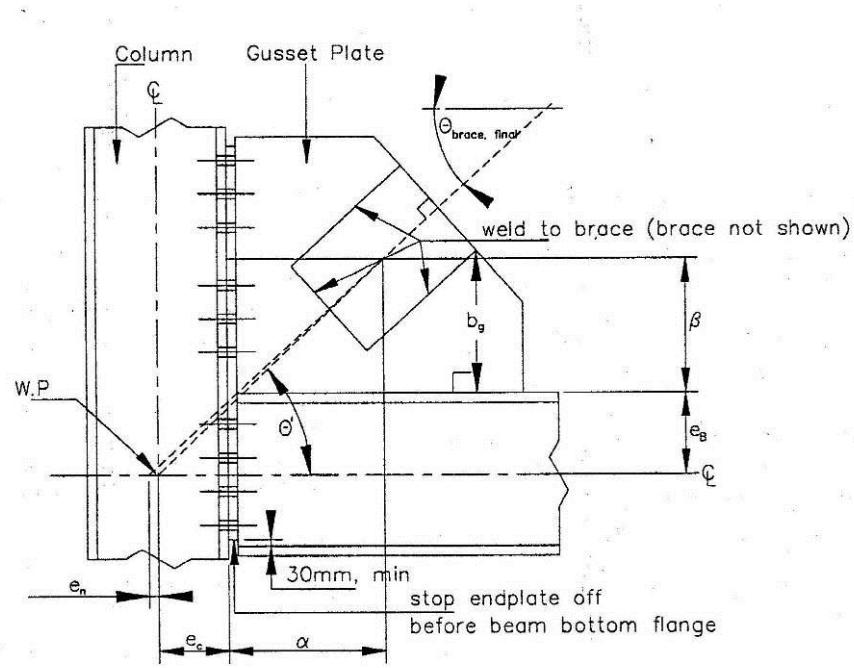

Figure 15: Beam/Brace/Column Connection with Endplate Stopped Short of Beam Bottom flange (Clifton, 1998)

Connection Design Procedure

1. Initial sizing of connection
   In DCB no. 56 Clifton (2000), guidance is given on initial selection of connection components including bolt numbers and endplate sizes. Consideration should be given to introducing connection eccentricity to produce smaller gusset plates, see figure 12.

2. Gusset Plate Design
    i. Determine gusset plate interface design actions using an appropriate equilibrium model.

    ii. The gusset plate shall be sized to satisfy the following limit states.
        a) Block Shear
        b) Whitmore Section Yielding
        c) Plate Buckling
           Note the following effective length factors are applicable for plate buckling:
           a. Corner gusset $k_e = 0.7$
           b. Midspan gusset $k_e = 1.4$
           Vertical stiffeners similar to figure 10 should be used for midspan gusset plates.
        d) Plate Combined Stresses

The critical locations for the stress check are at the gusset plate interfaces.

e) Gusset Unsupported Edge

Specific design guidance on limit state a) to e) is provided in Fussell (2010b) or the HERA New Zealand Structural Steel Limit State Design Guide Volume 1 (Clifton 1994). Note the block shear model in Clifton (1994) has been revised, see Fussell (2010b).

iii. Size Welds

a) Brace to Gusset Weld
This should be sized for the capacity design derived brace load.

b) Gusset to Column and Gusset to Beam Weld
These welds shall be sized for the tensile capacity in kN/mm of the plate.

3. Brace to Collector Beam Endplate
The tension capacity of the end plate must be determined using a yield line procedure. An appropriate procedure is given in step 1A, section 2.8 of SCI publication no. 207/95, Joints in Steel Construction: Moment Connections (1995).

The tension capacity is derived by considering three modes of failure for an equivalent tee stub, figure 16.

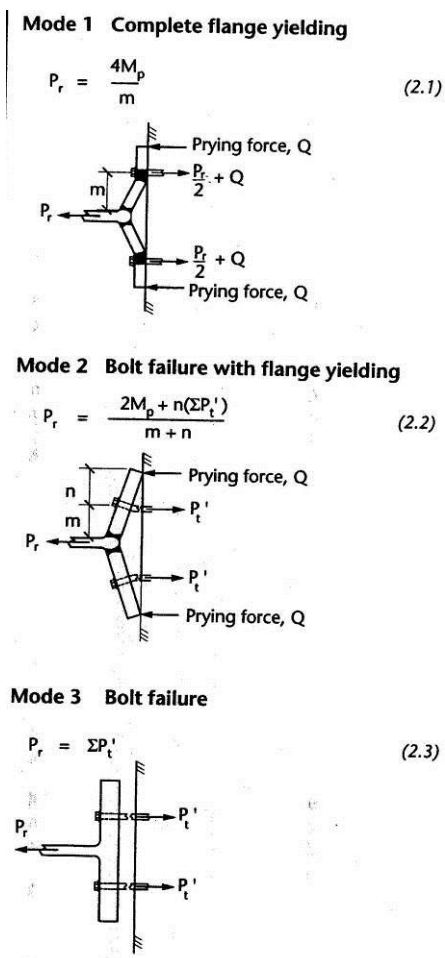

Figure 16: Endplate modes of failure in tension (SCI, 1995)

The first two modes involve full or partial flange yielding. Mode 3 behaviour which involves bolt failure alone is not permitted. The bolt capacity $\sum\phi N_{tf}$ must be greater than the tension capacity for modes 1 and 2.

Additional bolt prying forces must be accounted for when checking bolt capacities. Rather than implicitly calculating the prying force it recommended the bolt force is increased by 40%.

This is consistent with the observation that prying forces can vary from 0 – 40% depending on the plate geometry (SCI, 1995).

The bolts should therefore be checked for combined shear tension where:

$$V^* = \frac{V^*}{n_b}$$

$$H^* = \frac{1.4H^*}{n_b}$$

where:

V* is the gusset interface shear force derived using an appropriate equilibrium model.
H* is the gusset interface tension force derived using an appropriate equilibrium model.

To ensure bolts do not failure in a shear mode, the plate thickness t_p should be limited as follows:

$$t_{p,max} \leq 0.9d_f$$

Where
d_f = diameter of fastener

4. Column Tension Capacity Check
   The column flange tension capacity calculation proceeds in a similar manner to the brace to collector beam endplate. As previously discussed the column tension capacity should exceed that of the brace to collector beam endplate. As a rule of thumb the column flange thickness should exceed that of the endplate to satisfy the requirement. Specific calculations are required to check this.

5. Column Web Crippling
   If the brace to collector beam to column endplate is not left short of the inside face of the beam bottom flange, the column should be checked using the web crippling provisions of NZS3404 (clause 5.13) for a design concentrated load equal to:

   $$N^* = \phi A_f f_y$$

   where
   A_f is the bottom flange area.
   f_y is the yield stress of the collector beam.

6. Collector Beam Web
   The collector beam web should be checked for local yielding adjacent to the gusset plate.

7. Column Web
   The web of the column should be checked for local yielding adjacent to bolted connection.

References

Astaneh-Asl, A, Simple Methods for Design of Steel Gusset Plates, *Proceedings ASCE Structures Conference*, San Francisco, CA. 1989

Brown, V.L.S., Stability of Gusseted Connections in Steel Structures, A thesis submitted in partial fulfillment of Doctor of Philosophy in Civil Engineering, University of Delaware, 1988

Clifton, G.C., New Zealand Structural Steelwork Limit State Design Guides Volume 1, Report R4-80, NZ Heavy Engineering Research Association, Manukau City, 1994

Clifton, G.C., Design Guidance for Beam/Brace/Column Gusset Connections, HERA Steel Design and Construction Bulletin, no. 47, 1998

Clifton, G.C., Design Concepts for Brace/Beam/Column Connections in Braced Steel Frame Seismic-Resisting Systems, HERA Steel Design and Construction Bulletin, no. 56, 2000

Clifton, G.C., Design Example no. 61.1, Design of a Brace/Beam/Column Connection in a Braced Steel Frame, HERA Steel Design and Construction Bulletin, no. 56, 2001

Clifton C., Semi-Rigid Joints for Moment-Resisting Steel Framed Seismic-Resisting Systems, PhD Thesis, Department of Civil and Environmental Engineering, University of Auckland, 2005 (Also available as a HERA document)

Fussell, A.J., Design of Buckling Restrained Brace Systems, Steel Structures Seminar Series, Steel Construction New Zealand, Manukau City, March 2010a

Fussell, A.J., Light Brace Cleat Connections for Braced Steel Frames, Steel Structures Seminar Series, Steel Construction New Zealand, Manukau City, October 2010b

Lehman, D.E., Roeder, C.W., Herman, D., Johnson, S., and Kotulka, B., Improved Seismic Performance of Gusset Plate Connections, ASCE, *Journal of Structural Engineering*, Vol.134, No. 6, Reston, VA, 2008

Lopez, W.A., Gowie, D.S., Lauck, T.W. and Saunders, M., Structural Design and Experimental Verification of a Buckling Restrained Braced Frame System, Engineering Journal, 4th Quarter, American Institute of Steel Construction, 2004

Muir, L.S., Designing Compact Gussets with the Uniform Force Method, Engineering Journal, Furst Avarter, 2008, American Institute of Steel Construction, Chicago, Illinois, 2008

Roeder, C.W. and Lehman, D.E., Performance and Behaviour of Gusset Plate Connections, American Institute of Steel Construction, North American Conference, Phoenix, Arizona, 2008

SCI, Joints in Steel Construction: Moment Connections, P207, Steel Construction Institute, Ascot, U.K., 1995

SNZ, Steel Structures Standard (Incorporating Amendments 1 and 2), NZS 3404:1997, Standards New Zealand, Wellington, 2007

SNZ, Structural Design Actions Part 5: Earthquake Actions – New Zealand, 1170.5, Standards New Zealand, Wellington, 2004

Tamboli, A.R. (editor), Handbook of Structural Steel Connection Design and Detail, 2nd edition, McGraw Hill, New York, 2010